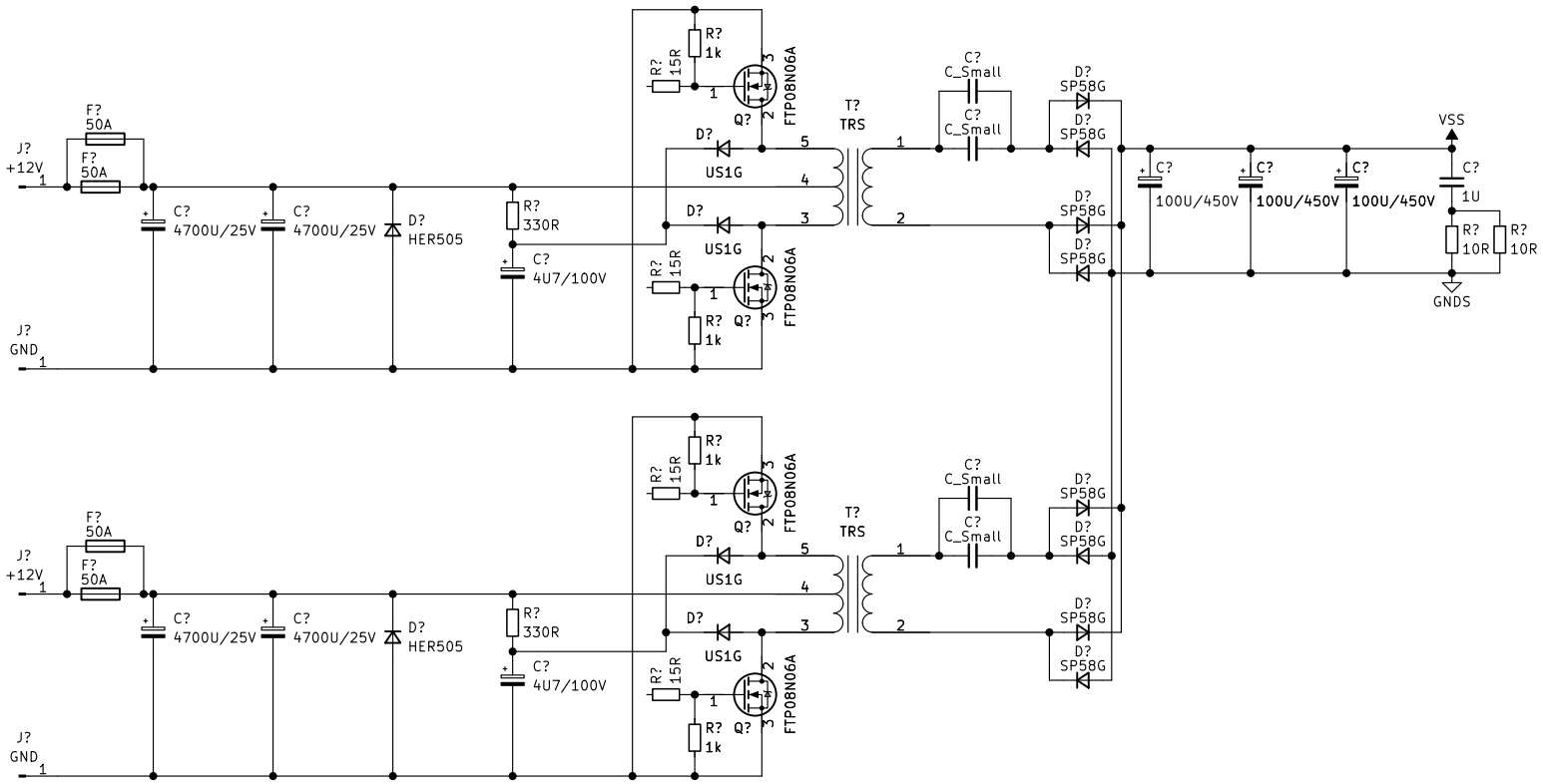

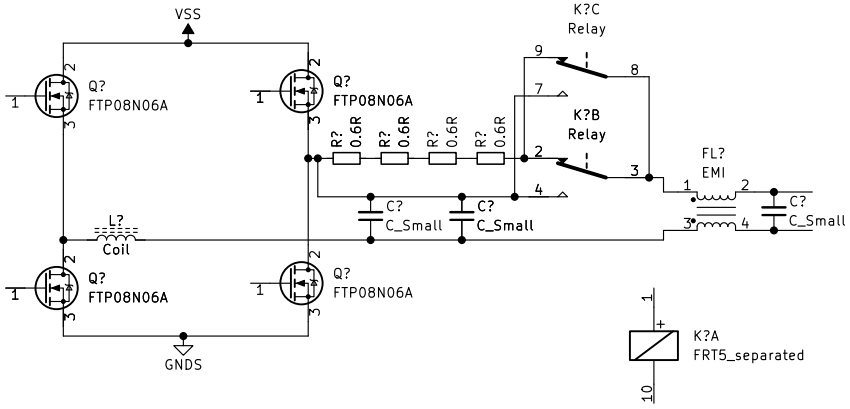

Marcel Konstapel
Mees Electronics

Sheet: /
File: xenteq_ppi1000.kicad_sch

Title: Xenteq PPI 1000 (reversed engineered)

Size: A4	Date: 2025-05-19	**Rev: A**
KiCad E.D.A. kicad 6.0.11		Id: 1/1